Double suspension

2 std SafeBulb/SafeSlider

SafeTrack General rules

*See further sizing details on enclosed project drawings, if any, and also see delivery note (packing list) and read off position description.

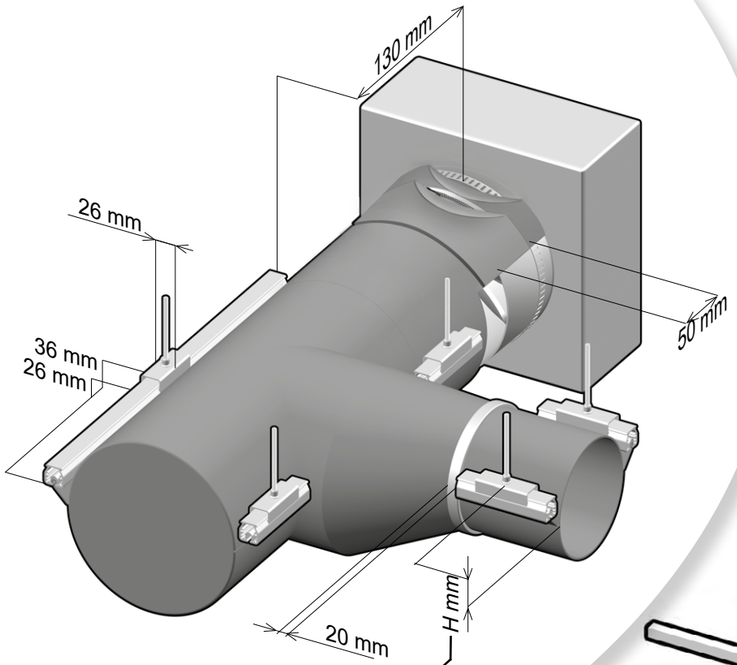

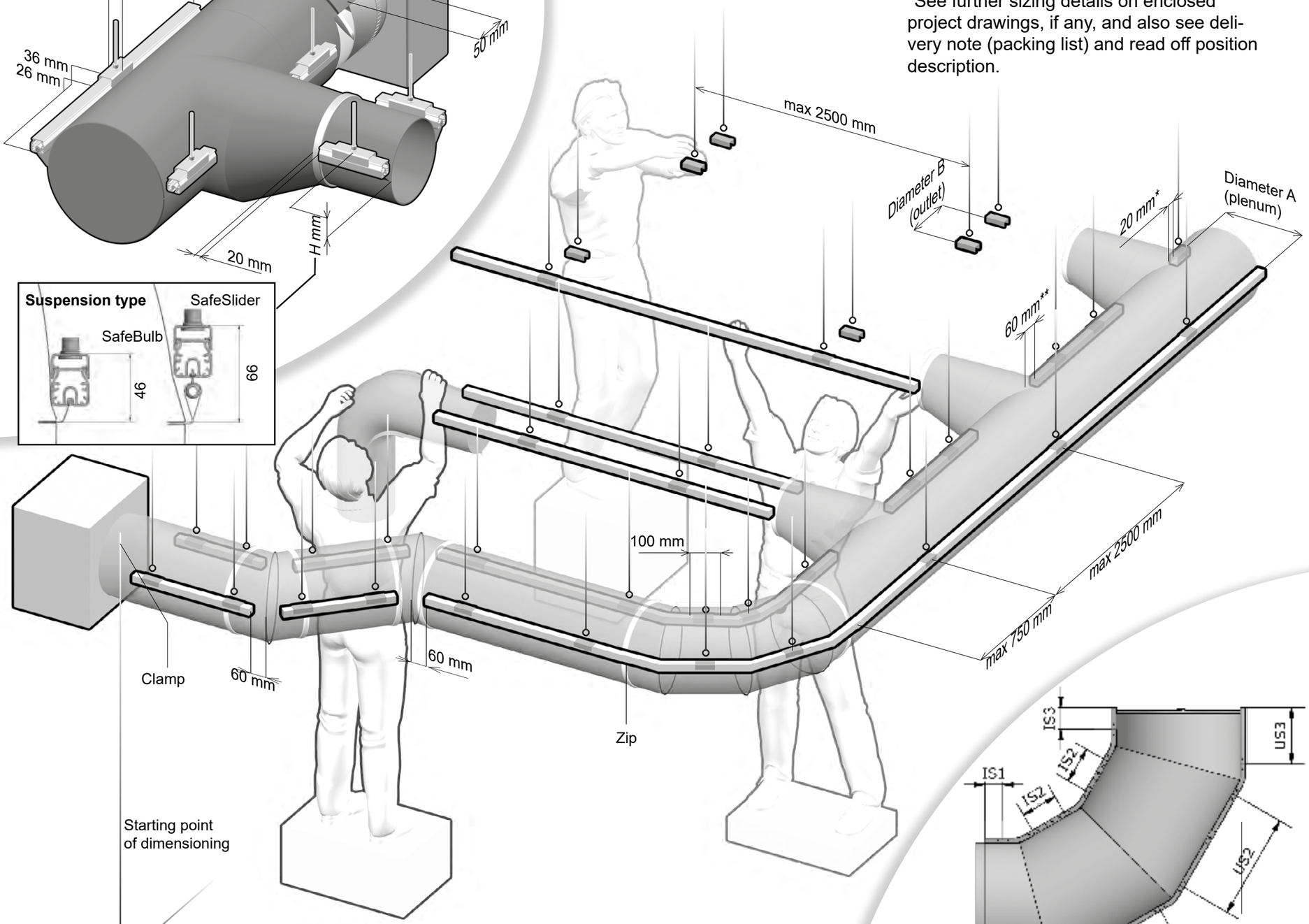

* 20 mm "externally" between end of SafeTrack and side of outlet socket

** 60 mm "internally" between end of SafeTrack and side of outlet socket

Please find information on delivery and installation in the box labelled INFO.

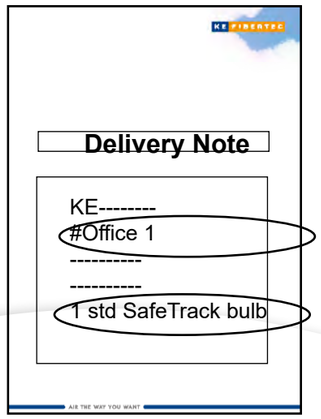

Room reference

Suspension type

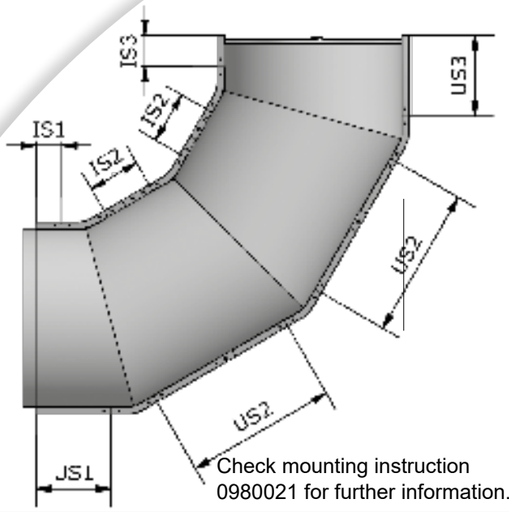

Check mounting instruction 0980021 for further information.

Alu-rails labelled with a saw symbol do not require further trimming.

Please note that some relevant information may be on the reverse side

0980004-GB

Single Suspension

1 std SafeBulb/SafeSlider

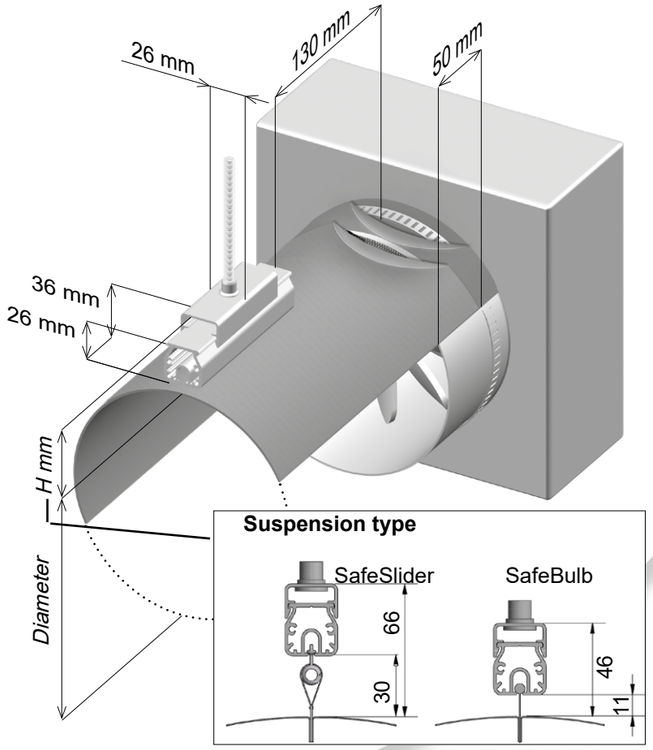

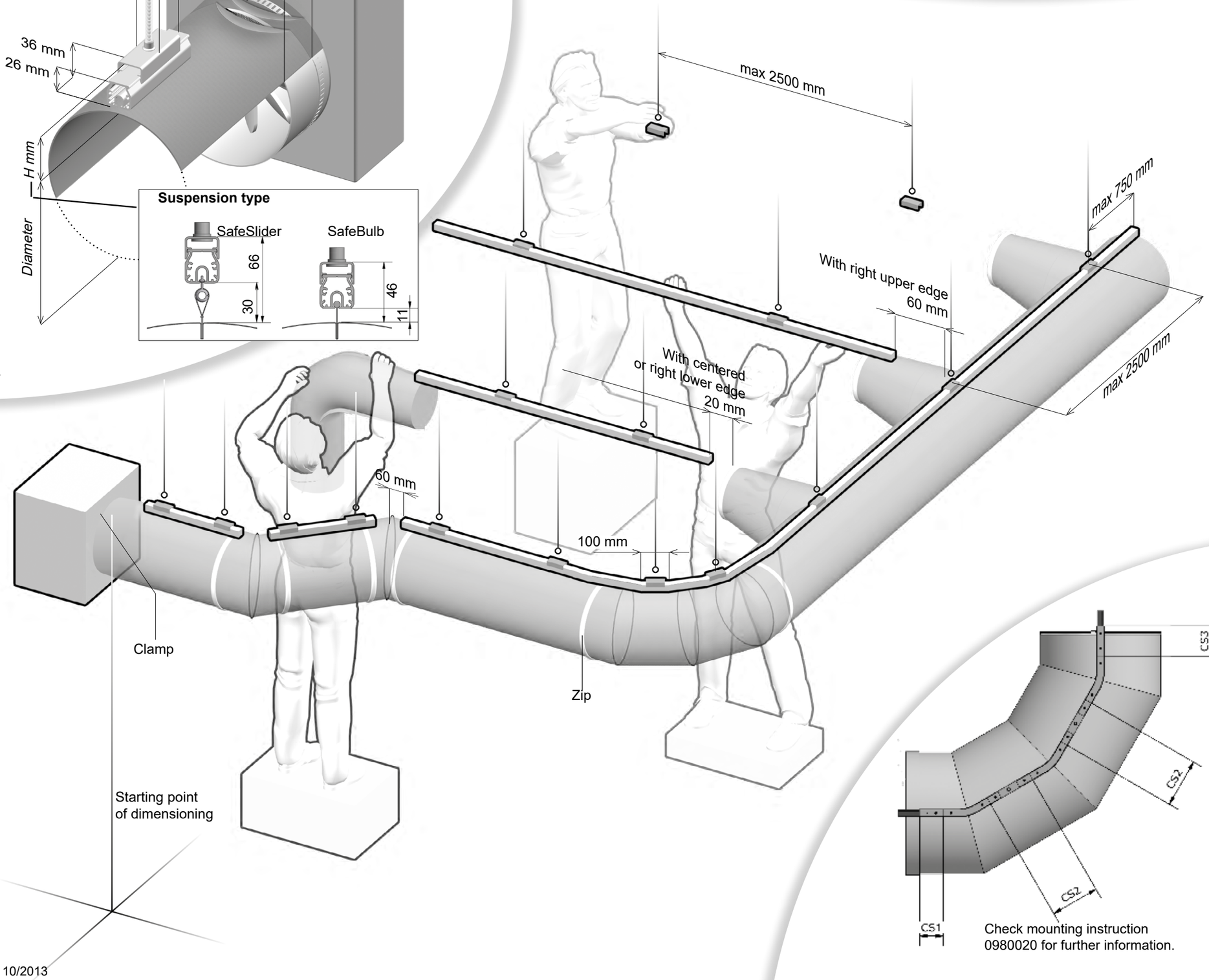

Please note that some relevant information may be on the reverse side

10/2013

KE FIBERTEC

SafeThread StrapUp

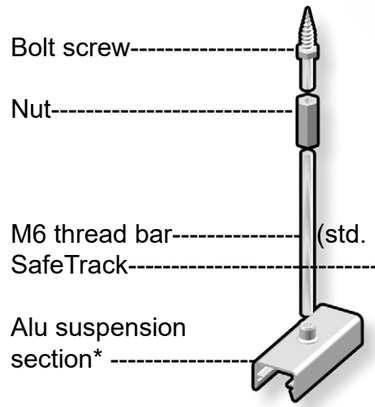

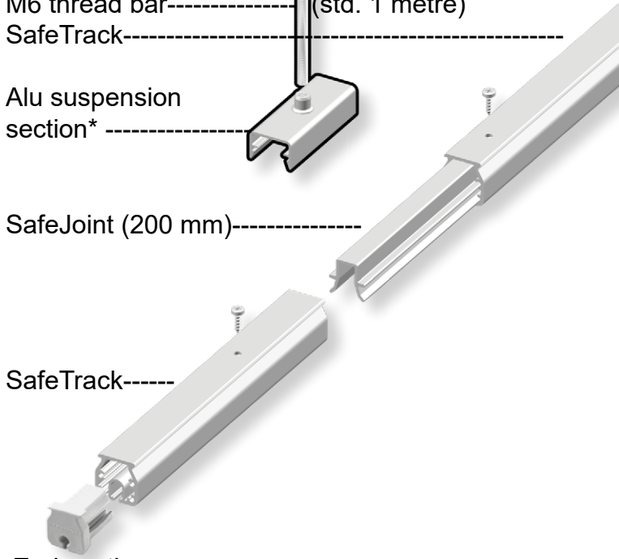

End section
(must be fitted before the ducts can be mounted into SafeTrack)

Check mounting instruction
0980020 for further information.

Upon assembly, the SafeTrack
is clicked into the alu-suspension.

*The alu-suspension sections supplied should be spaced out evenly for a given duct section. Check packing list for quantities.